RadioShack™

Cat. No. 49-2549

Simulated Security Camera

Your Simulated Security Camera provides a low-cost alternative to a live security video camera. It looks just like a real security video camera, with a battery-powered flashing LED that simulates camera operation. It even comes with a dummy 14-inch coaxial cable and wall plate, so it appears to be connected to a monitor or network. It can be installed outdoors if sheltered from the elements (for example, under a roof overhang).

The camera is easy to install and all mounting hardware is supplied.

Note: You need two C batteries (not supplied) to power the LED. The flashing LED operates on one set of alkaline batteries for about 4½ months.

PARTS LIST

Description	Qty
F-Connector	1
Wall Plate	1
Hex Nut	1
Washer	1
Camera Case	1
Coaxial Cable	1
Thin Screws	2
1-Inch Screws	6
Drywall Anchors	6
Bracket	1
Knobs	2

INSTALLATION

1. Install the F-connector in the aluminum wall-plate using the supplied hex nut and washer.

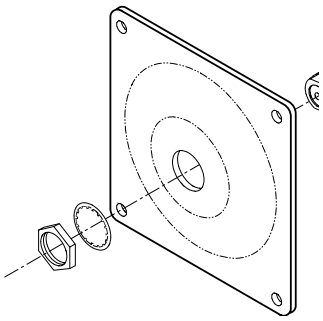

2. Grasp the camera case sides securely and pull them apart.

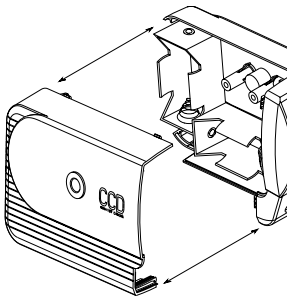

© 1997 Tandy Corporation.
All Rights Reserved.
RadioShack is a trademark used by Tandy Corporation.

3. Install two C batteries (not supplied), such as RadioShack Cat. No. 23-551, in the battery holders with the negative side of the battery touching the spring contact in each battery holder. The LED in the bezel blinks.

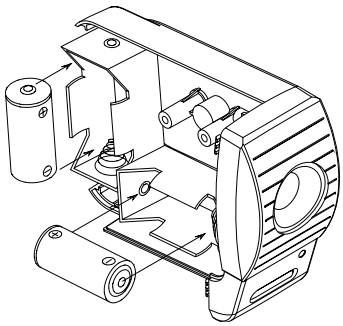

Caution: Do not mix old and new batteries, or standard and alkaline batteries.

If the LED does not blink, be sure that both batteries are installed with the negative side of the battery touching the spring contact in each battery holder.

4. Snap the camera case sides back together and secure them with the two supplied thin screws.

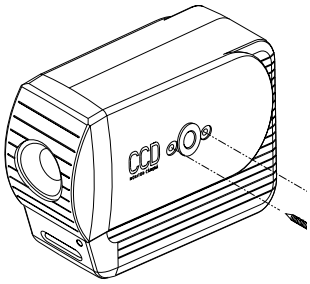

5. Connect the coaxial cable to the F-connectors on the camera and the wall plate.

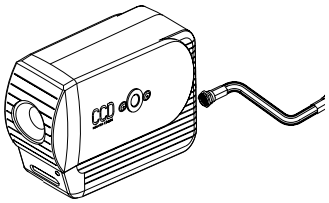

6. Select a mounting location for the camera and wall plate.

   Be sure the coaxial cable will reach from the wall plate to the camera when the camera is mounted in its bracket.

7. Mount the bracket using two of the supplied 1-inch screws and drywall anchors (if required).

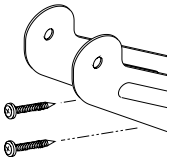

8. Mount the camera in the bracket using the supplied mounting knobs. Point the camera as you like, then tighten the knobs to secure the camera to the bracket.

9. Mount the wall plate using the remaining four 1-inch screws and drywall anchors (if required).

CARE AND MAINTENANCE

To enjoy your Simulated Security Camera for a long time:

- Keep the camera dry. If it gets wet, wipe it dry immediately.
- Use and store the camera only in normal temperature environments.
- Handle the camera gently and carefully. Don't drop it.
- Keep the camera away from dust and dirt.
- Wipe the camera with a damp cloth occasionally to keep it looking new.

Modifying or tampering with the camera's internal components can cause a malfunction and invalidate its warranty. If your camera is not performing as it should, take it to your local RadioShack store for assistance.

RadioShack Limited Warranty

This product is warranted against defects for 90 days from date of purchase from RadioShack company-owned stores and authorized RadioShack franchisees and dealers. Within this period, we will repair it without charge for parts and labor. Simply **bring your RadioShack sales slip** as proof of purchase date to any RadioShack store. Warranty does not cover transportation costs. Nor does it cover a product subjected to misuse or accidental damage.

EXCEPT AS PROVIDED HEREIN, RadioShack MAKES NO EXPRESS WARRANTIES AND ANY IMPLIED WARRANTIES ARE LIMITED IN DURATION TO THE DURATION OF THE WRITTEN LIMITED WARRANTIES CONTAINED HEREIN. Some states do not permit limitation or exclusion of implied warranties; therefore, the aforesaid limitation(s) or exclusion(s) may not apply to the purchaser.

This warranty gives you specific legal rights and you may also have other rights which vary from state to state.

We Service What We Sell *10/95*

RadioShack
A Division of Tandy Corporation
Fort Worth, Texas 76102

3/97 Printed in the USA